CAMBEK™

DESIGNER DOORS®

Part# 5010-0008

Important Documents

Installation & Wind Load Information – Model H2

This product is covered by United States Patent 7,299,853 B2

This packet MUST stay at Jobsite

CAMBEK™

DESIGNER DOORS®

Hurricane Frame™ Door, Glazed – Model H2 - FLBC# 6442.2
Installation Notes - 5010-0008

-------- Important! --------

These installation notes and enclosed drawings must be followed to ensure the wind-load and impact ratings of this door are achieved. Contact Cambek Engineering Department at 715-426-1100, if there is discrepancy between these instructions and the intended installation.

General Information ----------

- **This door(s) meet Miami-Dade County Testing Protocols PA-201, PA202 & PA 203 & have been issued (Notice of Acceptance) N.O.A. # 20-622.26 (Glazed), attached.**
- It is assumed the installer is familiar with the installation of Cambek Designer Doors overhead doors and installation practices of high wind-load doors.
- Special "hurricane" brackets (Detail 3) are furnished in two lengths with two additional brackets of each length are included in the hardware package.
- Hardware components **SHALL NOT** be substituted at any time.
- An extended length drill bit is required for masonry installations.
- Refer to drawings #1140, included in this package.
- Hilti, Kwik- Bolt II masonry anchors in 3.75" & 5" lengths and 3" lags are included in the hardware package.

Installation ----------

- Refer to the drawing and identify hardware and its location on the door.
- **Note - The outside hinges use six (6) lags at each location. See enclosed print.**
- Pilot drill ALL lag bolt holes to the minor diameter and approx ½ to 3/4 the length of the lag bolts.
- Repair any stripped lags with wood "sliver" and wood glue or construction adhesive.
- Drilling is required to secure "Hurricane" brackets to the track and continuous angle at some locations.
- Masonry anchors can be placed +/- 2" from standard locations.
- Verify the anchor embedment meets the drawing.

MIAMI-DADE COUNTY
PRODUCT CONTROL SECTION
11805 SW 26 Street, Room 208
Miami, Florida 33175-2474
T (786) 315-2590 F (786) 315-2599
www.miamidade.gov/economy

DEPARTMENT OF REGULATORY AND ECONOMIC RESOURCES (RER)
BOARD AND CODE ADMINISTRATION DIVISION

NOTICE OF ACCEPTANCE (NOA)

Designer Products LLC dba Cambek Designer Doors
702 Troy Street
River Falls, WI 54022

SCOPE: This NOA is being issued under the applicable rules and regulations governing the use of construction materials. The documentation submitted has been reviewed and accepted by Miami-Dade County RER-Product Control Section to be used in Miami Dade County and other areas where allowed by the Authority Having Jurisdiction (AHJ).

This NOA shall not be valid after the expiration date stated below. The Miami-Dade County Product Control Section (In Miami Dade County) and/or the AHJ (in areas other than Miami Dade County) reserve the right to have this product or material tested for quality assurance purposes. If this product or material fails to perform in the accepted manner, the manufacturer will incur the expense of such testing and the AHJ may immediately revoke, modify, or suspend the use of such product or material within their jurisdiction. RER reserves the right to revoke this acceptance if it is determined by Miami-Dade County Product Control Section that this product or material fails to meet the requirements of the applicable building code.

This product is approved as described herein and has been designed to comply with the Florida Building Code, including the High Velocity Hurricane Zone.

DESCRIPTION: Insulated and Glazed Wood Sectional Garage Door up to 10'-6" Wide

APPROVAL DOCUMENT: Drawing No. **1140**, titled "10'-6" Wide Glazed Hurricane Impact Wood Garage Doors", sheets 1 through 5 of 5, prepared by W. W. Schaefer Engineering & Consulting, P.A., dated 07/24/2002, with last revision F1 dated 11/13/2018, signed and sealed by Warren W. Schaefer, P.E., bearing the Miami-Dade County Product Control revision stamp with the Notice of Acceptance number and expiration date by the Miami-Dade County Product Control Section.

MISSILE IMPACT RATING: Large and Small Missile Impact Resistant

LABELING: A permanent label with the manufacturer's name or logo, manufacturing address, model/series number, the positive and negative design pressure rating, indicate impact rated if applicable, installation instruction drawing reference number, approval number (NOA), the applicable test standards, and the statement reading 'Miami-Dade County Product Control Approved' is to be located on the door's side track, bottom angle, or inner surface of a panel.

RENEWAL of this NOA shall be considered after a renewal application has been filed and there has been no change in the applicable building code negatively affecting the performance of this product.

TERMINATION of this NOA will occur after the expiration date or if there has been a revision or change in the materials, use, and/or manufacture of the product or process. Misuse of this NOA as an endorsement of any product, for sales, advertising or any other purposes shall automatically terminate this NOA. Failure to comply with any section of this NOA shall be cause for termination and removal of NOA.

ADVERTISEMENT: The NOA number preceded by the words Miami-Dade County, Florida, and followed by the expiration date may be displayed in advertising literature. If any portion of the NOA is displayed, then it shall be done in its entirety.

INSPECTION: A copy of this entire NOA shall be provided to the user by the manufacturer or its distributors and shall be available for inspection at the job site at the request of the Building Official. An original signed and sealed company letter from Designer Doors, Inc., is required, proving that the 10'-6" wide Glazed Wood Sectional Garage Door was purchased from them in order for this NOA to be valid on any job.

This NOA **revises NOA # 18-1128.05** and consists of this page 1 and evidence pages E-1, E-2 and E-3, as well as approval document mentioned above.

The submitted documentation was reviewed by **Carlos M. Utrera, P.E.**

MIAMI-DADE COUNTY APPROVED

NOA No. 20-0622.26
Expiration Date: October 10, 2022
Approval Date: August 27, 2020
Page 1

NOTICE OF ACCEPTANCE: EVIDENCE SUBMITTED

1. Evidence Submitted Under Previous NOAs

A. DRAWINGS ***"Submitted under NOA # 16-1216.06"***

1. Drawing No. **1140**, titled "10'-6" Wide Glazed Hurricane Impact Wood Garage Doors", sheets 1 through 5 of 5, prepared by W. W. Schaefer Engineering & Consulting, P.A., dated 07/24/2002, with last revision E1 dated 12/12/2016, signed and sealed by Warren W. Schaefer, P.E.

B. TESTS ***"Submitted under NOA # 10-1119.01"***

1. Test reports on 1) Large Missile Impact Test per FBC, TAS 201-94
2) Cyclic Wind Pressure Loading per FBC, TAS 203-94
along with marked-up drawings and installation diagram on a Series/Model H2/4 Section, glazed garage door, prepared by Architectural Testing, Inc., Test Report No. **94833.01-201-18**, dated 01/13/2010, signed and sealed by Joseph A. Reed, P.E.

2. Addendum letter to Test Reports No. **87472.01-201-18** and **87473.01-201-18** on Forced Entry Test per FBC, FBC 2411 3.2.1, TAS 202-94, prepared by Architectural Testing, Inc., dated 08/18/2009**,** signed and sealed by Joseph A. Reed, P.E.

"Submitted under NOA # 02-0807.01"

3. Test reports on 1) Uniform Static Air Pressure Test Loading per SFBC, PA 202-94
2) Cyclic Wind Pressure Loading per SFBC, PA 203-94
3) Large Missile Impact Test per SFBC, PA 201-94
along with marked-up drawings and installation diagram of a glazed wood clad garage door, both prepared by Architectural Testing, Inc., Test Report No. **02-33027.01** and No. **02-33946.01**, dated 10/10/2001 and 03/07/2002, signed and sealed by Allen Reeves, P.E. and Steven Urich, P.E. respectively.

C. CALCULATIONS ***"Submitted under NOA # 16-1216.06"***

1. Anchor verification calculations prepared by W.W. Schaefer Engineering & Consulting, P.A., dated 11/27/2001 and revised on 12/12/2016, signed and sealed by Warren W. Schaefer, P.E.

"Submitted under NOA # 10-1119.01"

2. Anchor verification calculations prepared by W.W. Schaefer Engineering & Consulting, P.A., dated 11/27/2001 and revised 11/15/2010, signed and sealed by Warren W. Schaefer, P.E.

D. QUALITY ASSURANCE

1. Miami-Dade Department of Regulatory and Economic Resources (RER)

Carlos M. Utrera, P.E.
Product Control Examiner
NOA No. 20-0622.26
Expiration Date: October 10, 2022
Approval Date: August 27, 2020

NOTICE OF ACCEPTANCE: EVIDENCE SUBMITTED

E. MATERIAL CERTIFICATIONS

1. Notice of Acceptance No. **16-1117.01**, issued to **Kuraray America, Inc.** for their "**Trosifol® Ultraclear, Clear and Color PVB Glass Interlayers**" approved on 01/19/2017, expiring on 04/08/2019.
2. Notice of Acceptance No. **15-1201.11** issued to **Eastman Chemical Company (MA)** for their "**Saflex Clear and Color Glass Interlayers**" approved on 03/17/2016, expiring on 05/21/2021.

F. STATEMENTS *"Submitted under NOA # 16-1216.06"*

1. Statement letter of code conformance to the 5th edition (2014) FBC issued by W.W. Schaefer Engineering & Consulting, P.A., dated 12/12/2016, signed and sealed by Warren W. Schaefer, P.E.
2. Statement letter of no financial interest, issued by W.W. Schaefer Engineering & Consulting, P.A., dated 12/12/2016, signed and sealed by Warren W. Schaefer, P.E.

"Submitted under NOA # 14-1118.08"

3. Asset purchase agreement dated 04/25/2014.

2. Evidence submitted under NOA # 17-0712.11

A. DRAWINGS

1. None.

B. TESTS

1. None.

C. CALCULATIONS

1. None.

D. QUALITY ASSURANCE

1. Miami-Dade Department of Regulatory and Economic Resources (RER)

E. MATERIAL CERTIFICATIONS

1. None.

F. STATEMENTS

1. Statement letter of code conformance to the 6th Edition (2017) FBC issued by W.W. Schaefer Engineering & Consulting, P.A., dated 07/06/2017, signed and sealed by Warren W. Schaefer, P.E.

Carlos M. Utrera, P.E.
Product Control Examiner
NOA No. 20-0622.26
Expiration Date: October 10, 2022
Approval Date: August 27, 2020

NOTICE OF ACCEPTANCE: EVIDENCE SUBMITTED

3. New evidence submitted

A. DRAWINGS *"Submitted under NOA # 18-1128.05"*

1. Drawing No. **1140**, titled "10'-6" Wide Glazed Hurricane Impact Wood Garage Doors", sheets 1 through 5 of 5, prepared by W. W. Schaefer Engineering & Consulting, P.A., dated 07/24/2002, with last revision F1 dated 11/13/2018, signed and sealed by Warren W. Schaefer, P.E.

B. TESTS

1. None.

C. CALCULATIONS

1. None.

D. QUALITY ASSURANCE

1. Miami-Dade Department of Regulatory and Economic Resources (RER)

E. MATERIAL CERTIFICATIONS

1. None.

F. STATEMENTS

1. Statement letter of code conformance to the 6th Edition (2017) and 7th Edition (2020) FBC issued by W.W. Schaefer Engineering & Consulting, P.A., dated 06/04/2020, signed and sealed by Warren W. Schaefer, P.E.

"Submitted under NOA # 18-1128.05"

2. Asset purchase agreement dated 11/08/2017.

Carlos M. Utrera, P.E.
Product Control Examiner
NOA No. 20-0622.26
Expiration Date: October 10, 2022
Approval Date: August 27, 2020

GENERAL NOTES:

1. THIS PRODUCT HAS BEEN TESTED, ANALYZED & APPROVED FOR DESIGN PRESSURES NOT TO EXCEED THOSE SHOWN IN THE "ALLOWABLE DESIGN PRESSURE TABLE(S)".
2. OPENINGS, BUCKING & BUCKING FASTENERS MUST BE PROPERLY DESIGNED & INSTALLED TO TRANSFER WIND LOADS TO THE STRUCTURE.
3. ALL HARDWARE & FASTENERS SHALL BE IN ACCORDANCE WITH THESE DRAWINGS & SHALL NOT VARY UNLESS SPECIFICALLY MENTIONED ON THE DRAWINGS. SPECIFIED ANCHOR EMBED TO BASE MATERIAL SHALL BE BEYOND WALL FINISH OR STUCCO.
4. THE DETAILS & SPECIFICATIONS SHOWN HEREIN REPRESENT THE PRODUCTS TESTED & PROPOSED FOR CONFORMANCE WITH THE FLORIDA BUILDING CODE PROTOCOLS TAS-201, 202 & 203 FOR LARGE MISSILE IMPACT PRODUCTS.
5. THIS PRODUCT HAS BEEN DESIGNED IN ACCORDANCE WITH AND MEETS THE REQUIREMENTS OF THE FLORIDA BUILDING CODE (FBC) INCLUDING HIGH VELOCITY HURRICANE ZONES (HVHZ).
6. IMPACT SHUTTERS ARE NOT REQUIRED WITH THIS PRODUCT.
7. ALL ANCHORS SECURING PRODUCT FRAMES TO PRESSURE TREATED BUCKS OR WOOD FRAMING SHALL BE CAPABLE OF RESISTING CORROSION CAUSED BY THE PRESSURE TREATING CHEMICALS IN THE WOOD.
8. DETERMINE THE POSITIVE & NEGATIVE DESIGN LOADS TO USE WHEN REFERENCING THESE DOCUMENTS IN ACCORDANCE WITH THE GOVERNING CODE AND GOVERNING WIND VELOCITY. FOR WIND LOAD CALCULATIONS IN ACCORDANCE WITH THE FLORIDA BUILDING CODE, A DIRECTIONALITY FACTOR OF Kd = 0.85 MAY BE APPLIED PER THE ASCE-7 STANDARD.
9. NO INCREASE IN ALLOWABLE STRESS HAS BEEN USED IN THE CERTIFICATION OF THIS PRODUCT. WIND LOAD DURATION FACTOR Cd = 1.6 WAS USED FOR WOOD SCREW ANALYSIS ONLY.
10. MATERIALS, INCLUDING BUT NOT LIMITED TO STEEL SCREWS, THAT COME INTO CONTACT WITH OTHER DISSIMILAR MATERIALS SHALL MEET THE REQUIREMENTS OF FLORIDA BUILDING CODE.
11. All WOOD MEMBERS OF THIS PRODUCT THAT MAY POSSIBLY COME INTO CONTACT WITH MASONRY OR CONCRETE SUBSTRATES, ARE SUBJECT TO MOISTURE &/OR ARE SUBJECT TO THE OUTSIDE ENVIRONMENT SHALL BE OF AN APPROVED DURABLE SPECIES OR BE TREATED IN AN APPROVED METHOD WITH AN APPROVED PRESERVATIVE PER FBC REQUIREMENTS.

ALLOWABLE DESIGN LOAD	
POSITIVE	NEGATIVE
48 PSF	65 PSF

THESE DRAWINGS ARE APPLICABLE ONLY TO THE PRODUCT SPECIFIED. THEY MAY NOT BE USED FOR THE ASSEMBLY AND/OR INSTALLATION OF ANY OTHER PRODUCT NOR MAY THEY BE USED FOR RATIONAL AND/OR LOCAL APPROVAL OF ANY PRODUCT NOT PRODUCED BY THE MANUFACTURER STATED ON THESE DRAWINGS.

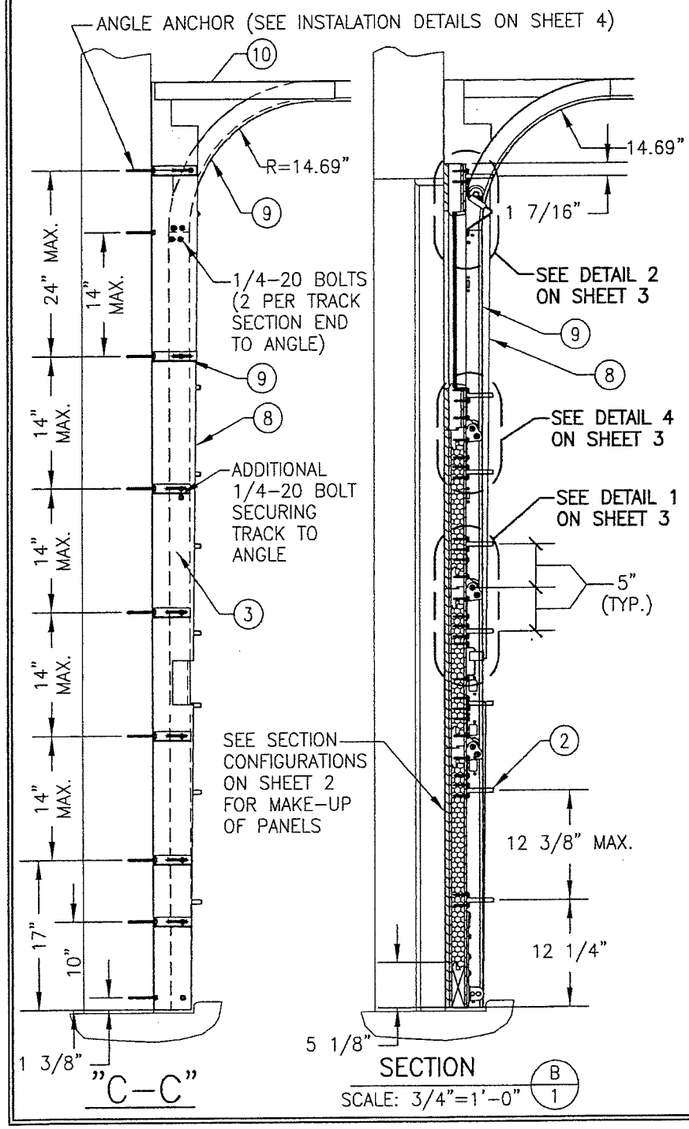

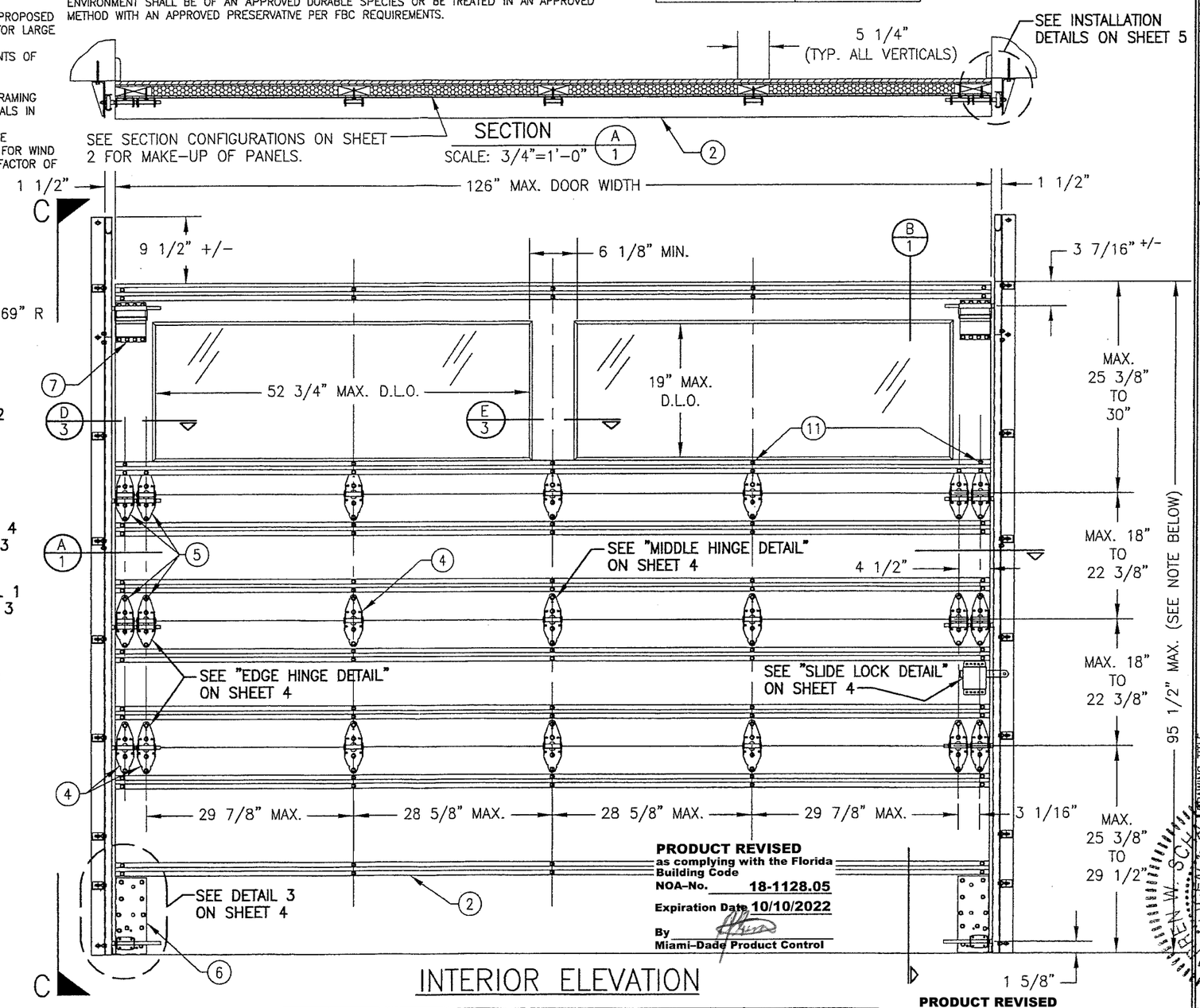

PRODUCT REVISED
as complying with the Florida Building Code
NOA-No. 18-1128.05
Expiration Date 10/10/2022
By
Miami-Dade Product Control

INTERIOR ELEVATION

NOTE: DOOR HEIGHT MAY BE INCREASED BY UP TO 22 3/8" INCREMENTS TO A MAXIMUM OF 24 FT. PROVIDING ADDITIONAL CENTER PANEL(S) IS PLACED.

2-LIGHT DOOR SHOWN; SEE SHEET 2 FOR 3-LIGHT CONDITION.

PRODUCT REVISED
as complying with the Florida Building Code
NOA-No. 20-0622.26
Expiration Date 10/10/2022
By
Miami-Dade Product Control

NO.	REVISION DESCRIPTION	BY	DATE
B1	REDUCE MEETING STILE WIDTH & UPDATE TO PRESENT STANDARDS	WGM	12/04/08
C1	ADD DUPONT BUTACITE GLASS	WWS	11/15/10
D1	MANUFACTURER NAME CHANGE	WWS	11/12/14
E1	UPDATE TO CURRENT STANDARDS	WWS	12/12/16
F1	MANUFACTURER NAME CHANGE	WWS	11/13/18

DRAWN BY: W.W.S. | CHECKED BY: W.W.S.
PLOT: 1=16 | DATE: 07/24/02

DRAWING TITLE: 10'-6" WIDE GLAZED HURRICANE IMPACT WOOD GARAGE DOORS

MANUFACTURER: DESIGNER PRODUCTS, LLC dba CAMBEK DESIGNER DOORS
702 TROY ST.
RIVER FALLS, WI 54022
800-241-0525

CONSULTANTS: W.W. SCHAEFER ENGINEERING & CONSULTING, P.A. (CA 6809)
7480 150TH COURT NORTH
PALM BEACH GARDENS, FL 33418
PHONE: 561-744-3424

WARREN W. SCHAEFER, P.E. No. 44435 — STATE OF FLORIDA — PROFESSIONAL ENGINEER
CERTIFICATE OF AUTHORIZATION No. 6809
DEC 13 2018

DRAWING NO. 1140 | REV. F
SHEET NO. 1 OF 5

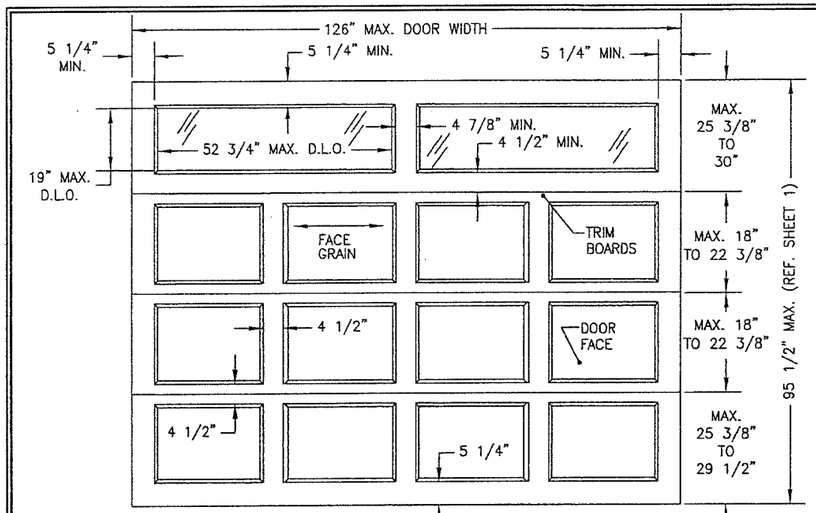

TYP. RAISED PANEL
EXTERIOR ELEVATION

(2-LIGHT DOOR SHOWN; SEE BELOW FOR TYP. ELEVATION OF 3-LIGHT DOOR SECTION ALSO APPLICABLE)

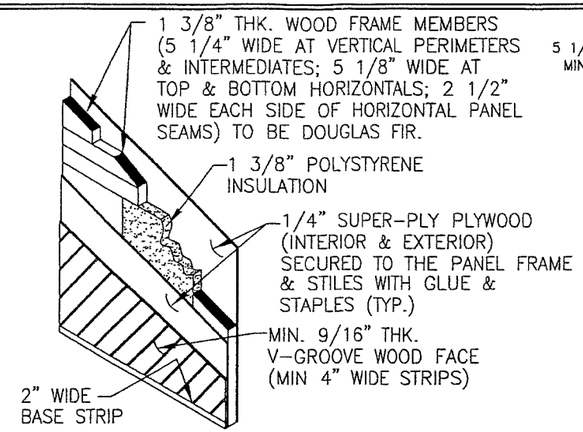

TYP. V-GROOVE PANEL

(V-GROOVE MAY RUN IN ANY DIRECTION)

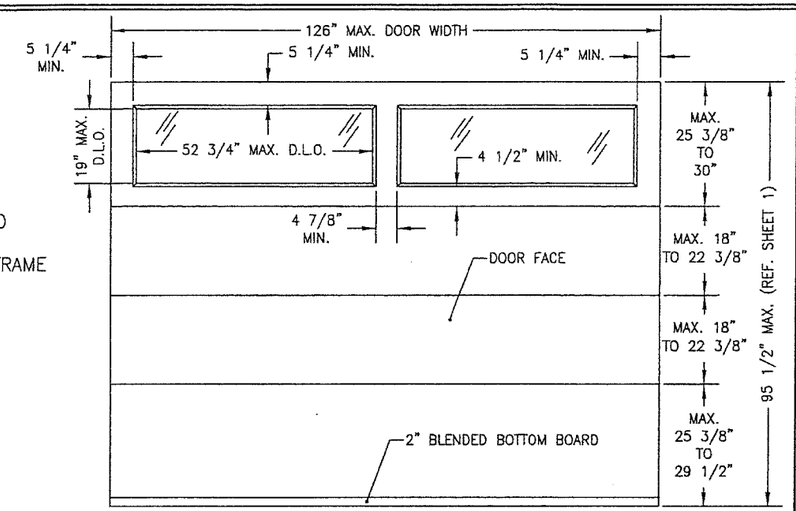

TYP. FLAT PANEL
EXTERIOR ELEVATION

(2-LIGHT DOOR SHOWN; SEE BELOW FOR TYP. ELEVATION OF 3-LIGHT DOOR SECTION ALSO APPLICABLE)

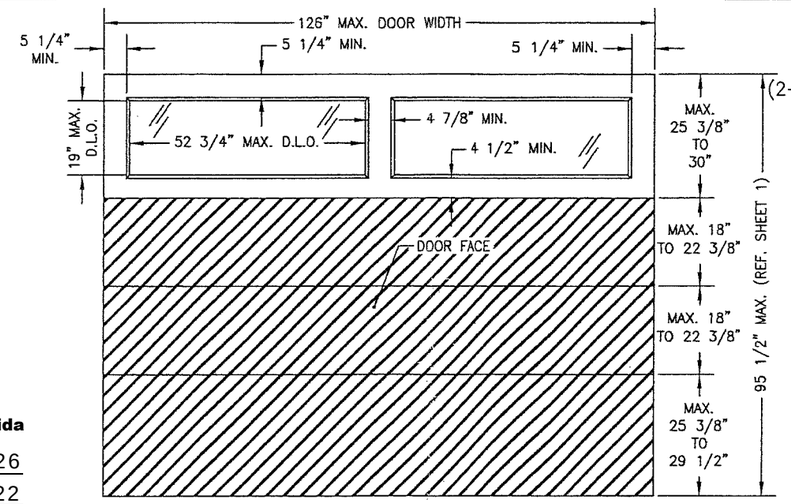

TYP. V-GROOVE PANEL
EXTERIOR ELEVATION

(V-GROOVE MAY RUN IN ANY DIRECTION)
(2-LIGHT DOOR SHOWN; SEE BELOW FOR TYP. ELEVATION OF 3-LIGHT DOOR SECTION ALSO APPLICABLE)

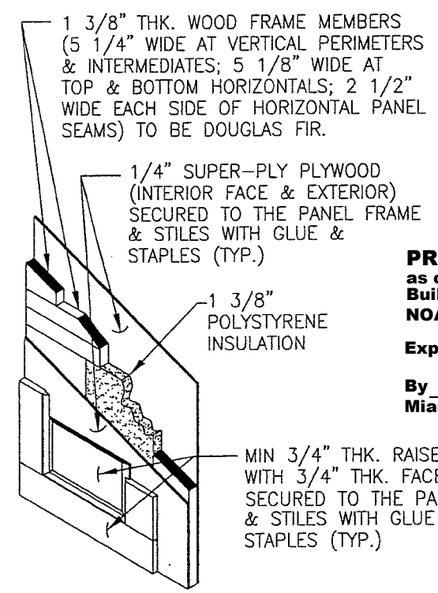

TYP. RAISED PANEL

PRODUCT REVISED
as complying with the Florida Building Code
NOA-No. 20-0622.26
Expiration Date 10/10/2022
By
Miami-Dade Product Control

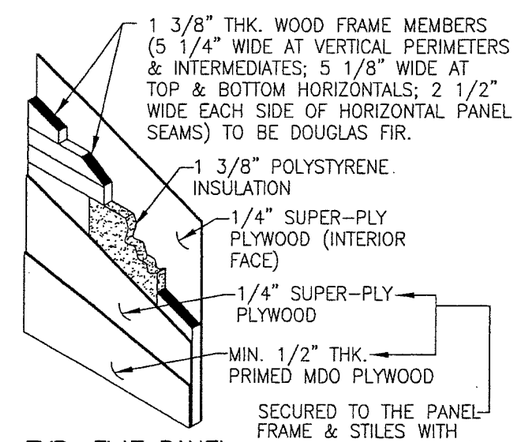

TYP. FLAT PANEL

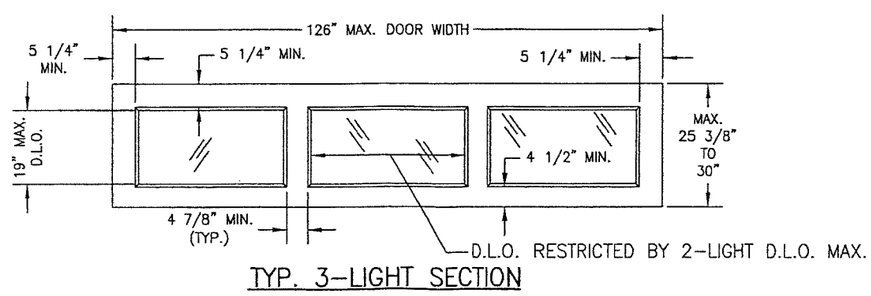

TYP. 3-LIGHT SECTION

PRODUCT REVISED
as complying with the Florida Building Code
NOA-No. 18-1128.05
Expiration Date 10/10/2022
By
Miami-Dade Product Control

NOTE: GLAZED DOOR SECTION MAY BE LOCATED EITHER AT THE TOP OR TOP MIDDLE SECTIONAL OF THE DOOR.

WARREN W. SCHAEFER LICENSE No. 44135 STATE OF FLORIDA PROFESSIONAL ENGINEER
CERTIFICATION DEC 19 2018

DRAWN BY: W.W.S.	CHECKED BY: W.W.S.
PLOT: 1=32	DATE: 07/24/02

NO.	REVISION DESCRIPTION	BY	DATE

DRAWING TITLE
10'-6" WIDE GLAZED HURRICANE IMPACT WOOD GARAGE DOORS

MANUFACTURER
DESIGNER PRODUCTS, LLC
dba CAMBEK DESIGNER DOORS
702 TROY ST.
RIVER FALLS, WI 54022
800-241-0525

CONSULTANTS
W. W. SCHAEFER ENGINEERING & CONSULTING, P.A. (CA 6809)
7480 150TH COURT NORTH
PALM BEACH GARDENS, FL 33418
PHONE: 561-744-3424
WARREN W. SCHAEFER, P.E.
REG. NO. 44135

DRAWING NO. 1140 REV. F

SHEET NO. 2 OF 5

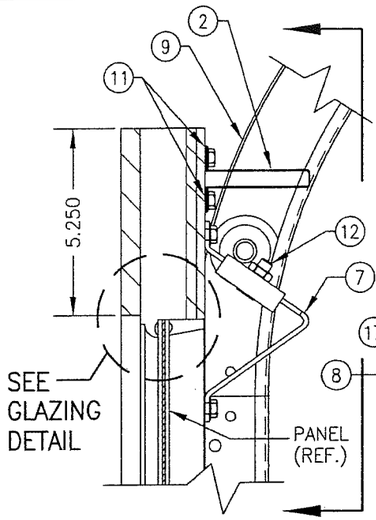

DETAIL 2

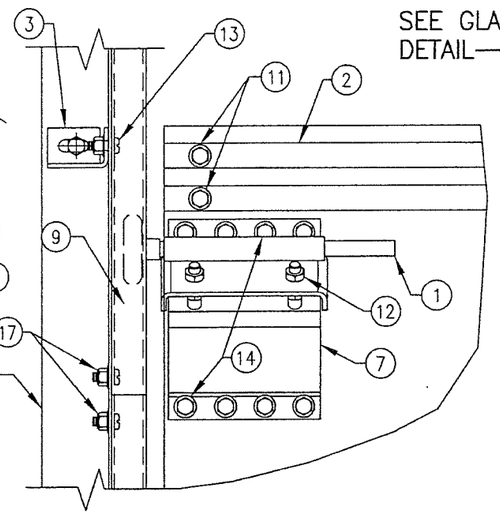

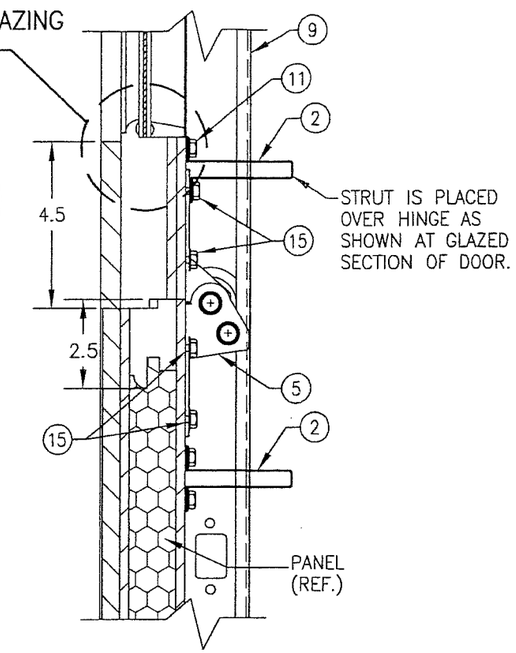

DETAIL 4

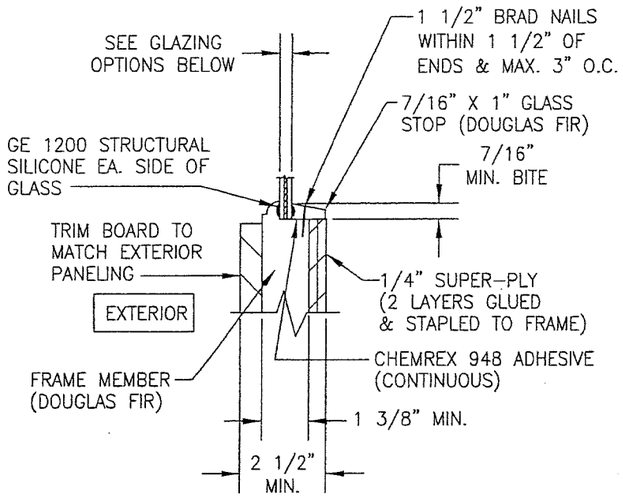

GLAZING DETAIL

GLAZING OPTIONS:
OPTION 1: 3/8" LAMINATED GLASS (1/8" AN/0.09 EASTMAN CHEM. CO. SAFLEX/1/8" AN)
OPTION 2: 3/8" LAMINATED GLASS (1/8" AN/0.09 KURARAY (PREVIOUSLY DUPONT) BUTACITE PVB/1/8" AN)

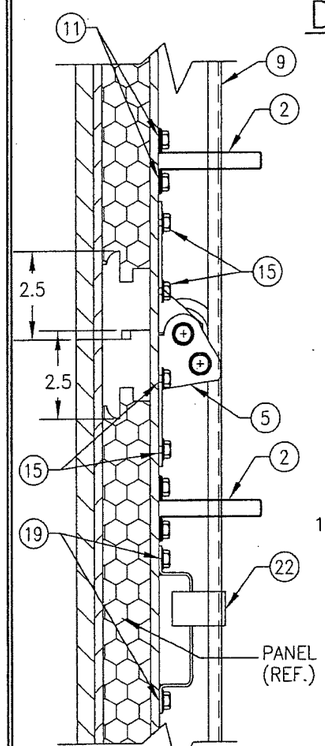

DETAIL 1

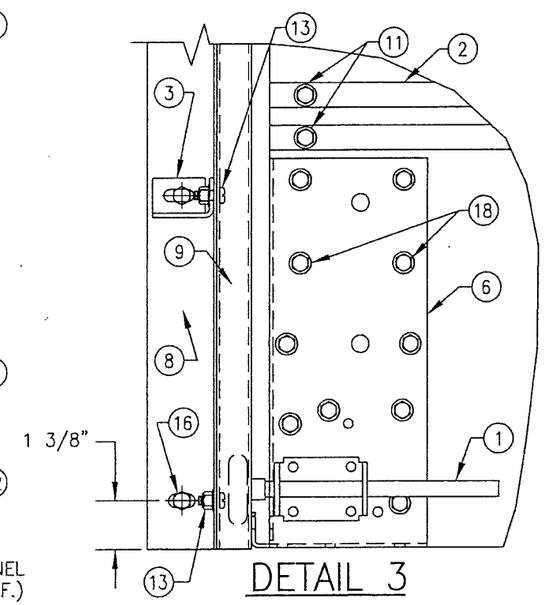

DETAIL 3

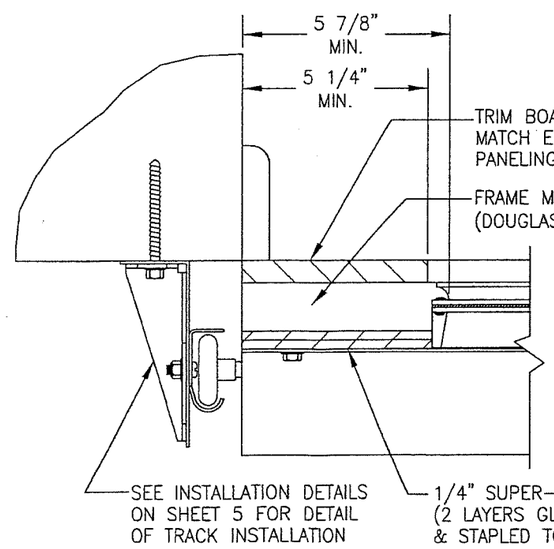

SECTION D/3
SCALE: 1/4 FULL

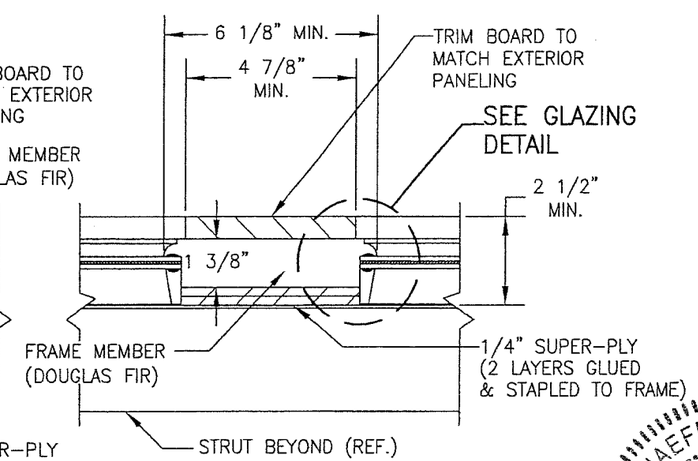

SECTION E/3
SCALE: 1/4 FULL

PRODUCT REVISED
as complying with the Florida Building Code
NOA-No. 20-0622.26
Expiration Date 10/10/2022
By
Miami-Dade Product Control

PRODUCT REVISED
as complying with the Florida Building Code
NOA-No. **18-1128.05**
Expiration Date **10/10/2022**
By
Miami-Dade Product Control

WARREN W. SCHAEFER ★ LICENSE No. 44135 ★ PROFESSIONAL ENGINEER ★ STATE OF FLORIDA

DRAWN BY: W.W.S.	CHECKED BY: W.W.S.
PLOT: 1=4	DATE: 07/24/02

NO.	REVISION DESCRIPTION	BY	DATE

DRAWING TITLE: 10'-6" WIDE GLAZED HURRICANE IMPACT WOOD GARAGE DOORS

MANUFACTURER: DESIGNER PRODUCTS, LLC dba CAMBEK DESIGNER DOORS
702 TROY ST.
RIVER FALLS, WI 54022
800-241-0525

CONSULTANTS: W. W. SCHAEFER ENGINEERING & CONSULTING, P.A. (CA 6809)
7480 150TH COURT NORTH
PALM BEACH GARDENS, FL 33418
PHONE: 561-744-3424

CERTIFICATION: WARREN W. SCHAEFER, P.E. NO. 44135
SEP 18 2018

DRAWING NO. 1140 REV. F
SHEET NO. 3 OF 5

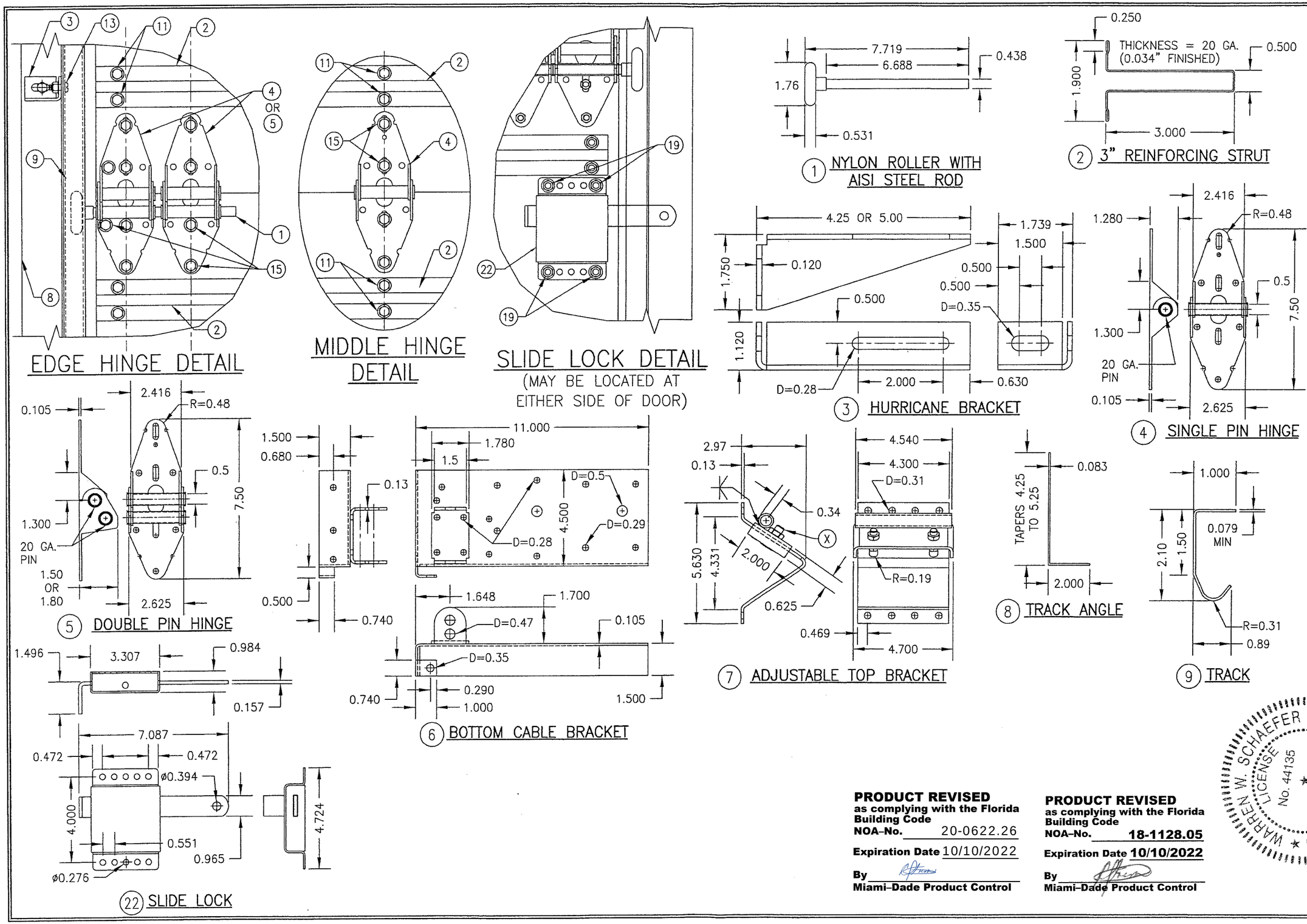

PRODUCT REVISED
as complying with the Florida Building Code
NOA-No. 20-0622.26
Expiration Date 10/10/2022
By [signature]
Miami-Dade Product Control

PRODUCT REVISED
as complying with the Florida Building Code
NOA-No. **18-1128.05**
Expiration Date **10/10/2022**
By [signature]
Miami-Dade Product Control

WARREN W. SCHAEFER LICENSE No. 44135 PROFESSIONAL ENGINEER FLORIDA

NO.	REVISION DESCRIPTION	BY	DATE

DRAWN BY: W.W.S. | CHECKED BY: W.W.S.
PLOT: 1=4 | DATE: 07/24/02

DRAWING TITLE: 10'-6" WIDE GLAZED HURRICANE IMPACT WOOD GARAGE DOORS

MANUFACTURER: DESIGNER PRODUCTS, LLC dba CAMBEK DESIGNER DOORS
702 TROY ST.
RIVER FALLS, WI 54022
800-241-0525

CONSULTANTS: W. W. SCHAEFER ENGINEERING & CONSULTING, P.A. (CA 6809)
7480 150TH COURT NORTH
PALM BEACH GARDENS, FL 33418
PHONE: 561-744-3424

CERTIFICATION: WARREN W. SCHAEFER, P.E. P.E. NO. 44135
DEC 13 2018

DRAWING NO. 1140 | REV. F
SHEET NO. 4 OF 5

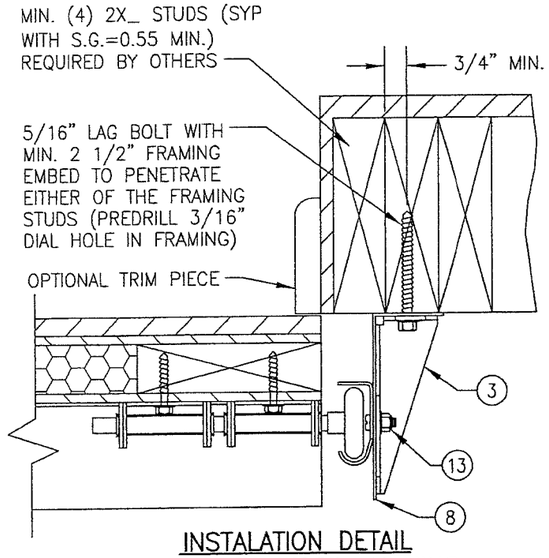

INSTALATION DETAIL
DIRECT TO WOOD FRAMING

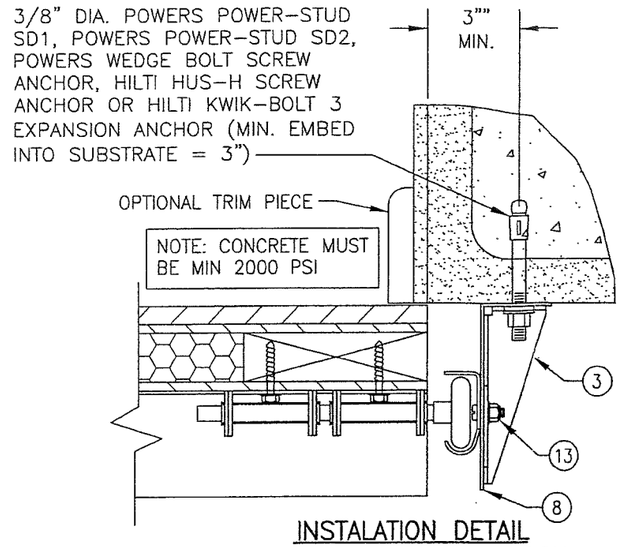

INSTALATION DETAIL
DIRECT TO FILLED BLOCK
OR SOLID CONCRETE

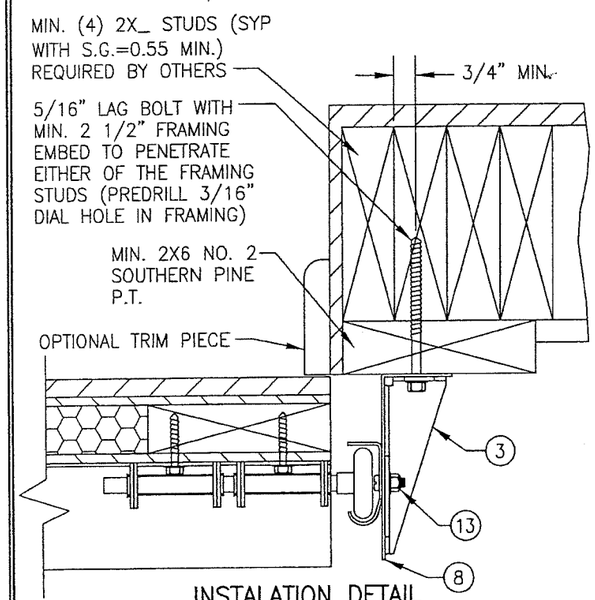

INSTALATION DETAIL
SHIMMED TO WOOD FRAMING

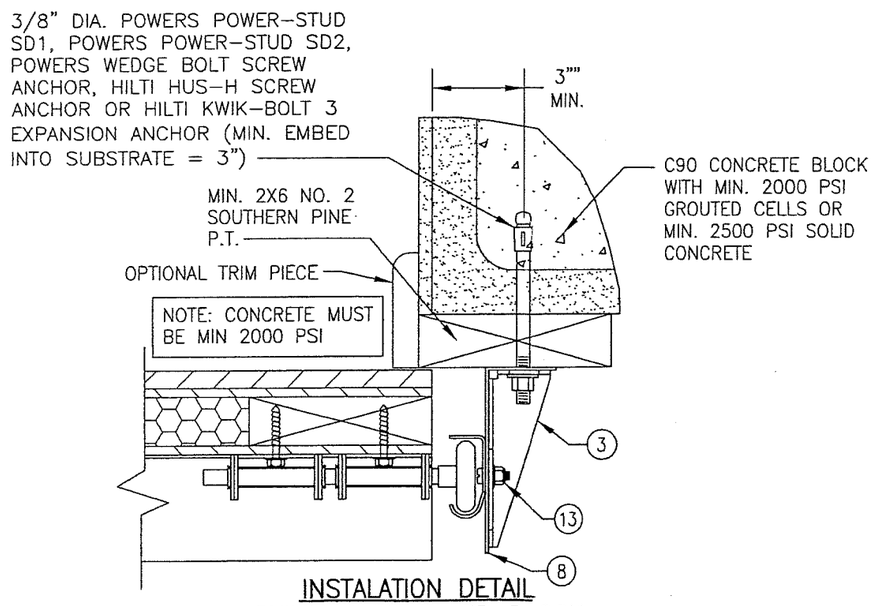

INSTALATION DETAIL
SHIMMED TO FILLED BLOCK
OR SOLID CONCRETE

ITEM #	PART	ITEM DESCRIPTION	MANUFACTURER/NOTES
		PARTS & HARDWARE	
1	1030-0269	ROLLER	NYLON W/AISI 1045 STL. ROD
2	1030-0213	3" REINFORCING STRUT (2 PER PANEL)	GALV. 80 KSI STEEL
3	1030-0267 1030-0268	HURRICANE BRACKET	GALV. 36 KSI STEEL
4	1030-0123	SINGLE ROLLER HINGE	GALV. 36 KSI STEEL
5	1030-0124 1030-0125	DOUBLE ROLLER HINGE	GALV. 36 KSI STEEL
6	1030-0084	BOTTOM CABLE BRACKET	GALV. 36 KSI STEEL
7	1030-0237	ADJUSTABLE TOP BRACKET	GALV. 36 KSI STEEL
8	1030-0065	TRACK ANGLE (TAPERED)	GALV. 33 KSI STEEL
9	1030-0227	VERTICAL TRACK (HORIZ. TRACK SIMILAR)	GALV. 33 KSI STEEL
10	1030-0063	HORIZONTAL REINFORCEMENT ANGLE	GALV. 33 KSI STEEL
		MISCELLANEOUS FASTENERS	
11	–	1/4 X 1 1/2 HEX WASHER HEAD LAG SCREW	ALIGNED WITH HINGES CENTERLINES PER ELEVATION
12	–	3/8-16 BOLT	2 AT EACH TOP BRACKET
13	–	1/4-20 X 5/8 RIB NECK TRACK BOLT	1 PER HURRICANE BRACKET TO TRACK
14	–	1/4 X 1 1/2 HEX WASHER HEAD LAG SCREW	8 PER TOP BRACKET
15	–	1/4 X 1 1/2 HEX WASHER HEAD LAG SCREW	4 PER HINGE (6 PER EDGE HINGE)
16	–	TRACK ANCHOR AT TOP & BOTTOM OF TRACK ANGLE	PER INSTALLATION DETAIL W/O BRACKET
17	–	1/4-20 X 5/8 RIB NECK TRACK BOLT	4 AT TRACK SEAM (TRACK TO ANGLE)
18	–	1/4 X 1 1/2 HEX WASHER HEAD LAG SCREW	10 PER BOTTOM CABLE BRACKET
19	–	1/4 X 1 1/2 HEX WASHER HEAD LAG SCREW	4 PER SLIDE LOCK
		LOCKING HARDWARE	
22	1030-0199	SLIDE LOCK	STEEL 1018 ZINC PLATED

PANEL NOTES:

1. HORIZONTAL & VERTICAL FRAME MEMBERS ARE EDGE COPED, BUTTED TOGETHER & GLUED WITH "GORILLA GLUE." IN ADDITION, THE VERTICAL MEMBERS ARE SCREWED TO THE HORIZONTAL WITH 2 NO. 8 X 2" SCREWS ANGLED FROM THE BACK FACE OF THE DOOR.
2. SUPER-PLY PLYWOOD IS STAPLED TO THE FRAME WITH 18 GA. X 5/8" X 1/4" STAPLES AND GLUED WITH CHEMREX 948 URETHANE ADHESIVE.
3. THE EXTERIOR PANEL/STRIPS ARE ATTACHED TO THE SUPER-PLY AND FRAME WITH 18 GA. X 1 1/2" X 1/4" STAPLES AND CHEMREX 948 URETHANE ADHESIVE.
4. EXTERIOR FINISH WOOD (PANELS/STRIPS) USED IN TESTING WAS NO. 2 WESTERN RED CEDAR WITH A SPECIFIC GRAVITY OF G = 0.32. OTHER WOOD SPECIES APPLICABLE FOR USE WITH THIS PRODUCT ARE THOSE WITH A SPECIFIC GRAVITY OF 0.32 OR GREATER.
5. ALL INTERIOR FRAME MEMBERS SHALL BE NO. 2 DOUGLAS FIR WITH G = 0.49.
6. IT IS THE OPTION OF DESIGNER DOOR TO INCORPORATE AN INTERIOR FINISH FACE ON ANY DOOR. THIS FACE SHALL BE EQUAL TO THOSE EXTERIOR FACES APPROVED PER THE DETAILS ON THIS DRAWING AND BE SECURED TO THE DOOR IN THE SAME MANNER AS THE EXTERIOR FACE. THIS INTERIOR FACE SHALL BE AN ADDITIONAL LAYER AND SHALL NOT REPLACE ANY LAYER SHOWN IN THE DETAILS ON THIS SHEET. ALSO, ALL HARDWARE LAG SCREWS SHALL BE LENGTHENED TO MIN. 2 1/4" TO ALLOW FOR THE ADDITIONAL THICKNESS OF THE ADDED INTERIOR SKIN.

PRODUCT REVISED
as complying with the Florida Building Code
NOA-No. 20-0622.26
Expiration Date 10/10/2022
By
Miami-Dade Product Control

PRODUCT REVISED
as complying with the Florida Building Code
NOA-No. 18-1128.05
Expiration Date 10/10/2022
By
Miami-Dade Product Control

WARREN W. SCHAEFER ★ ENGINEER ★ PROFESSIONAL ENGINEER ★ STATE OF FLORIDA ★ No. 44135 ★ LICENSE

DRAWN BY: W.W.S.	CHECKED BY: W.W.S.
PLOT: 1=4	DATE: 07/24/02

NO.	REVISION DESCRIPTION	BY	DATE

DRAWING TITLE
10'-6" WIDE GLAZED HURRICANE IMPACT WOOD GARAGE DOORS

MANUFACTURER
DESIGNER PRODUCTS, LLC
dba CAMBEK DESIGNER DOORS
702 TROY ST.
RIVER FALLS, WI 54022
800-241-0525

CONSULTANTS
W. W. SCHAEFER ENGINEERING & CONSULTING, P.A. (CA 6809)
7480 150TH COURT NORTH
PALM BEACH GARDENS, FL 33418
PHONE: 561-744-3424

CERTIFICATION
DEC 13 2018
WARREN W. SCHAEFER, P.E.
P.E. NO. 44135

DRAWING NO.	REV.
1140	F

SHEET NO. 5 OF 5